5MP · MOTORIZED VF · AI

TCM-DM9340IAF/AI

5MP Dome IR Motorized VF IP Camera

Sharp 5MP detail, 4× zoom and AI detection, day and night.

5MP | AI | IP66



5.0MP	4× Zoom	IP66	30 m	H.265	AI	PoE
2560 × 1920	2.8–12 mm	Waterproof	IR night vision	Compression	Human · car	802.3af

DESCRIPTION

The **TCM-DM9340IAF/AI** is a 5MP dome IP camera with a 4× motorized varifocal lens, giving sharp detail over wide areas from 2.8 to 12 mm with auto focus.

Built-in AI counts people and detects cars, and 30 m infrared keeps watch at night. The IP66 metal housing and PoE make it easy to install indoors or out.

TYPICAL APPLICATIONS

Parking lots | Retail | Offices | Warehouses | Campus

FEATURE

- 5.0MP progressive scan CMOS, 2560 × 1920
- 4× motorized zoom, 2.8–12 mm, auto focus
- Metal dome housing, IP66 waterproof
- AI human shape counting
- AI car shape detection
- IR LEDs up to 30 m, 120 dB WDR
- ONVIF profile S / G, RCA audio in / out
- PoE (802.3af) or 12 V DC power

TECHNICAL SPECIFICATION

MODEL	TCM-DM9340IAF/AI		
Sensor	5MP progressive scan CMOS	Effective Pixels	2560 (H) × 1920 (V)
Min. Illumination	0.07 lux color (F1.3, 1/30 s) · 0 lux B/W with IR on		
Focal Length	2.8–12 mm motorized VF (4×)	Max. Aperture	F1.3
Min. Distance	0.5 m	Lens / Mount	DC auto iris, P-Iris / board-in
Compression	H.265 / H.264 / MJPEG	Frame Rate	25 fps at 2560 × 1920
API	ONVIF profile S / G	Streaming	Main stream / sub stream
Ethernet	RJ45, 10/100BASE-T	Protocol	TCP/IP, RTSP, NTP, HTTP, DHCP, UDP
Audio	RCA in / line out (max 1 Vrms) · G.711 u-law / a-law · 2-way		
IR Distance	30 m (98 ft)	WDR	120 dB
Day & Night	Auto (ICR), color, B/W, external, schedule	S/N Ratio	42 dB
Noise Reduction	2D + 3D noise filter	Motion Detection	7-point polygon zones
Shutter Speed	2 – 1/12,000 s, anti-flicker	Backlight Comp.	Off / BLC / HLC, WDR
Video Analytics	Cross border, electronic fence, off-duty detection, human counting, car shape detection		
Power	12 V DC or PoE (IEEE 802.3af)	Consumption	Max. 9 W (12 V DC) / 10 W (PoE)
Operating Temp.	−10 to +55 °C, <90 % RH	Storage Temp.	−50 to +60 °C, <90 % RH
Protection	IP66	Housing / Weight	White metal, 700 g

DIMENSION (mm)

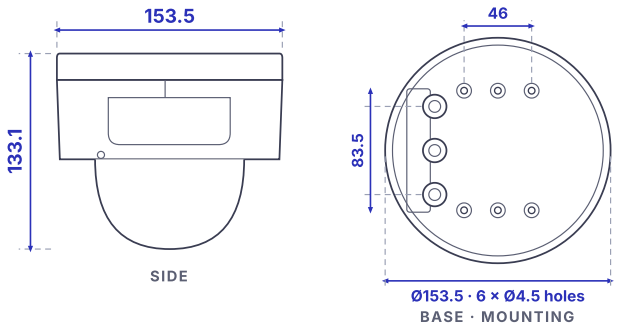

SYSTEM & APPLICATION

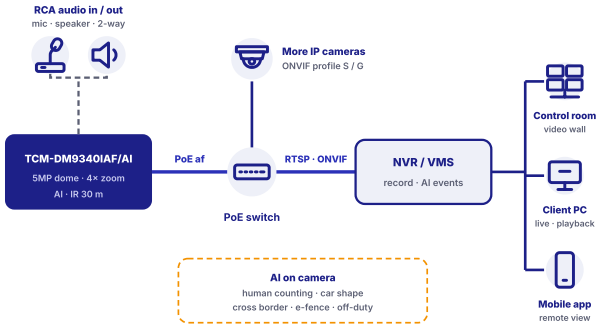

© 2026 Techma Technology · Specifications are subject to change without prior notice