PATIENT BED · TCM-NC8100 SERIES

TCM-NC8100BU2

All-in-One Bed Call Unit with Handset Holder

One button to call or ask for assistance, plus a handset.

Call / Assist | **Code Blue** | **Presence**



All-in-1 Call · 2× Assist
Handset With holder
Code Blue Emergency
Presence Staff cancel
Corridor By colour
86 mm Wall plate
SLA Logged

DESCRIPTION

The **TCM-NC8100BU2** is the new TCM-NC8100 bed unit. Its all-in-one Call button sends a call with one press and an assistance request with two, next to Code Blue, Presence and a handset in a wall holder.

Each call goes to the room controller, lights the corridor lamp in its own colour and shows on MedSync Station and Console through the MedSync Enterprise or TCM-BGM9000Pro server. Staff press Presence on arrival, so response time is logged.

TYPICAL APPLICATIONS

Hospital wards | Nursing homes | Clinics | ICU & VIP rooms

FEATURE

- All-in-one Call: 1 press call, 2 presses assistance
- Code Blue button (blue) for medical emergencies
- Presence button (green): staff arrival cancels the call
- Patient handset with wall holder on a coiled cable
- Handset call button for patients in bed
- Corridor light shows the call type by colour
- Response time logged for SLA / KPI reports
- 86 × 86 mm bevelled wall plate
- Wires to the TCM-NC8102GW / NC8104GW controller

TECHNICAL SPECIFICATION

MODEL	TCM-NC8100BU2		
Application	Bedside call point for ward, ICU and VIP rooms		
Call Button	All-in-one (red): 1 × press = Call · 2 × press = Assistance		
Other Buttons	Code Blue (blue), Presence (green)		
Patient Handset	1-button call handset with wall holder	**Handset Cable**	Coiled, approx. 1.5 m extended
Corridor Lamp	Red: Call · Yellow: Assistance · Blue: Code Blue · Green: Staff presence		
Call Cancel	Presence button at the bed	**Output**	Bed input of the room controller
Controller	TCM-NC8102GW / TCM-NC8104GW	**Expansion**	TCM-NC8100GW/S, +5 beds
Server	TCM-NC8000E (MedSync) / TCM-BGM9000Pro	**Nurse Station**	MedSync Station / Console
Power Supply	12 V DC from the room controller	**Mounting**	Wall-mounted, 86 box
Housing	ABS, light grey	**Operating Temp.**	0 to +45 °C
Dimension	Wall plate 86 × 86 × 10 mm · Handset with holder approx. 40 × 90 mm		

DIMENSION (mm)

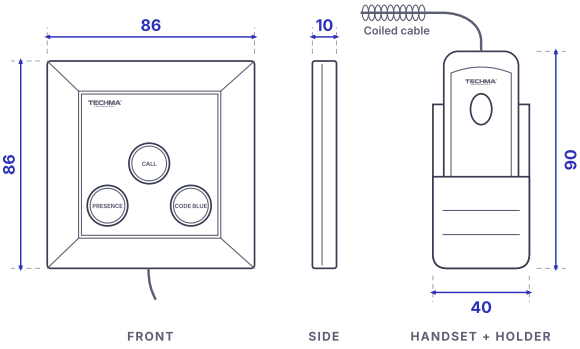

SYSTEM & APPLICATION

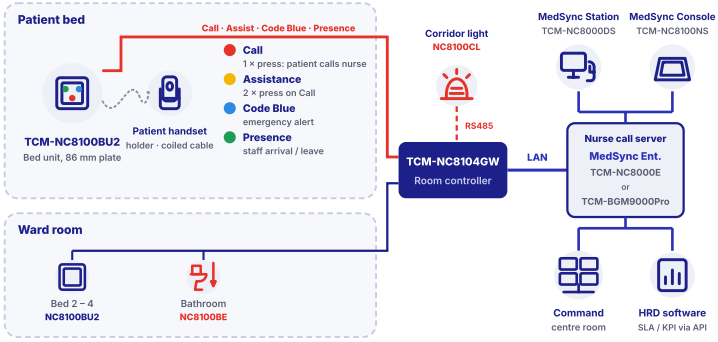

© 2026 Techma Technology · Specifications are subject to change without prior notice